600W 5QT MULTIFUNCTIONAL OPEN MIXER

Instruction Manual
MODEL CCDM2

CONGRATULATIONS!

The Cook's Companion Open Mixer is a powerful 600 watt multifunctional 5 quart appliance. The mixer features six different speeds and a pulse function for variable mixing. The included beaters and dough hook make bread, dough, whipped cream, cookies, cakes, and much more. The included scraper aides the beaters by continuously scraping the ingredients from the sides of the bowl.

PARTS IDENTIFICATION

*Please locate all parts before throwing away the box.

Scraper

Beaters

Dough Hook

Hook Scraper

Lid

Inner Lid

Instruction Manual

Cookie Paddles

Bowl

Rod

Base

Power Knob

Spatula

IMPORTANT SAFEGAURDS

When using electrical appliances, basic safety precautions should be followed as follows:

- Read all instructions.
- Do not use for anything other than intended use.
- Do not leave the appliance unattended during operation.
- Do not place the unit on or near gas or electric cooktops to avoid damages.
- Make sure the unit is turned to “0” position and unplugged before moving the unit.
- Place the unit on a level surface away from walls and cupboards . Do not let the cord hang over the edge of a table or counter or touch hot surfaces.
- Close supervision is necessary when any appliance is used by or near children.
- Keep hands, hair, clothing, and utensils away from the moving parts while in use as to avoid injury and damage to the unit.
- Wait until moving parts stop running before removing the lid or the bowl.
- Do not fill ingredients above the max line on the bowl.
- Unplug unit from outlet before cleaning and clean after every use.
- Do not use unit with an extension cord, always plug into a wall outlet.
- To prevent electrical shock do not immerse cord, plugs or appliance in water or other liquid.
- If the unit stops operating, the motor is overheated, turn the power knob to “0” and unplug the unit and allow the unit to cool (approximately 20 minutes). Plug the unit back in and continue operation.
- Do not operate any appliance with a damaged cord or plug or after the appliance malfunctions, or is dropped or damaged in any manner.
- Do not use outdoors.
- The use of unauthorized attachments is not recommended by the appliance manufacturer, this could cause injuries or damage to the unit.
- This appliance has a polarized plug (one blade is wider than the other). To reduce the risk of electric shock, this plug will fit in a polarized outlet only one way. If the plug does not fit fully in the outlet, reverse the plug. If it still does not fir, contact a qualified electrician. Do not modify the plug in any way.
- SAVE THESE INSTRUCTIONS.

ATTACHMENT ASSEMBLY

How To Assemble the Scraper & Beater Attachments Together

1. Hold the scraper attachment with the scrapers facing upward in your hand.
2. Place the beater attachment inside of the scraper attachment on an angle one side at a time.
3. Press on the inside housing of the beater attachment by the tab and click the tab over the beater housing.
4. Repeat with the tab on the other side of the housing. The scraper and beater should be firmly in place. (See figure below for reference)
5. To assemble the beater attachment into the bowl, firmly press the attachment onto the rod in the middle of the bowl.

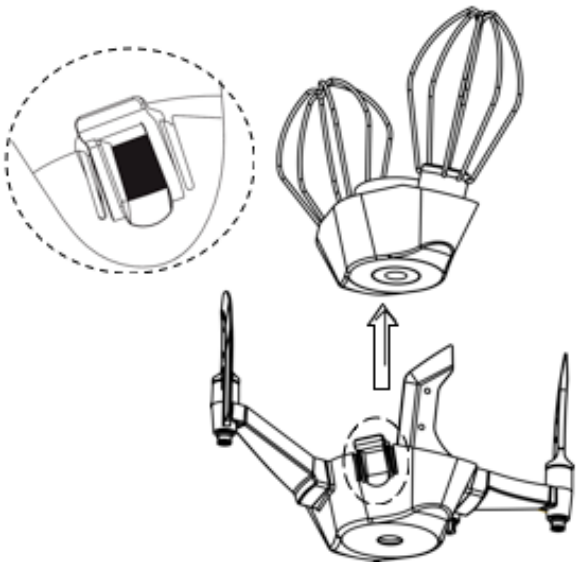

Note: The beaters can be used without adding the scraper. Do not use the scraper without ingredients inside the bowl as this will damage the silicone on the scraper.

How to Assemble the Dough Hook into Bowl

The hook scraper needs to be inserted into the dough hook before use. Align the dough hook and hook scraper then turn the dough scraper clockwise to lock in place. Then assemble the dough hook and hook scraper into the bowl, firmly press the dough hook and hook scraper attachment onto the rod in the middle of the bowl.

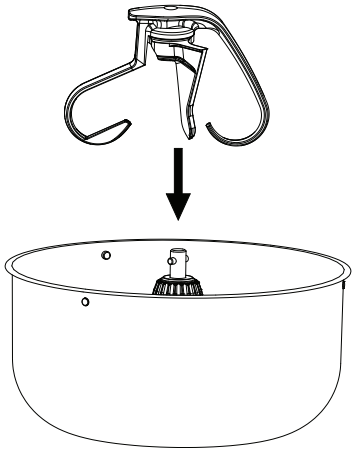

How to Assemble the Cookie Paddles

To assemble the cookie paddles, first take the beaters off the housing by pulling downward on the top part of the beater nearest the housing. Then one cookie paddle at a time push them into the beater housing until secure on the silver rods.

BEFORE FIRST USE

1. Remove all packaging materials. Locate all parts before throwing the box away.
2. Clean the bowl, lid, spatula and attachments with hot water, dishwashing liquid, and a non-abrasive sponge.
3. Wipe the inside and outside of the appliance with a clean cloth.

USING THE APPLIANCE

1. Place the bowl on the base of the unit. Insert the desired attachment onto the rod in the bowl. See page 4 for reference on assembly.
2. Make sure the power knob is at “0” before plugging in the unit for proper use. Then plug the unit into a power socket.
3. Insert desired ingredients into the bowl. Do not fill above the max line on the bowl. Once desired ingredients are inside place the lid on the unit.

Note: The inner lid is able to be removed during the mixing process if more ingredients need to be added in.

4. Select desired speed by turning the power knob to the right, the speeds are marked 1, 2, 3, 4, 5, & 6. 1 being the least powerful and 6 being the most powerful. To pulse the ingredients turn the power knob to the left to the “P” position.
5. To pause or stop when mixing turn the power knob to “0”.
6. Take the lid off the bowl and remove the attachments before removing the bowl from the base.
7. Remove ingredients. Use the spatula to help remove ingredients from the bowl.

Note: When making dough the maximum amount of dry ingredients that can be mixed in the bowl is 2.2lb. (1KG) or 3.3lb. (1.5KG) of wet dough. In the event the bowl is filled past capacity and the unit stops working, turn the power knob to “0”, allow the motor to cool down, reduce the amount and then continue use.

CLEANING

Always unplug the unit before cleaning. Clean the lid, bowl, spatula and attachments after each use. To clean the bowl, rod, lid, spatula and attachments hand wash with water, non-abrasive liquids and a sponge, dry with a soft cloth. To clean the base, wipe with a dry cloth.

NOTE: It is not recommended to place any of these parts in the dishwasher.

If a more thorough clean is desired on the beaters or cookie paddles, they can be removed by pulling up on the beaters or cookie paddles and gear. These parts should be hand washed with water, non-abrasive liquids and a sponge, dry with a soft cloth. To reassemble the beater attachment place the gear back into place and then place the beaters back into place and press down. See figures below.

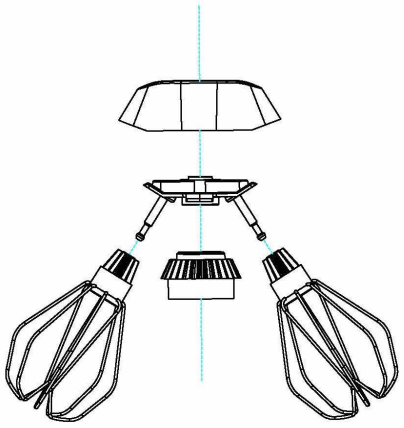

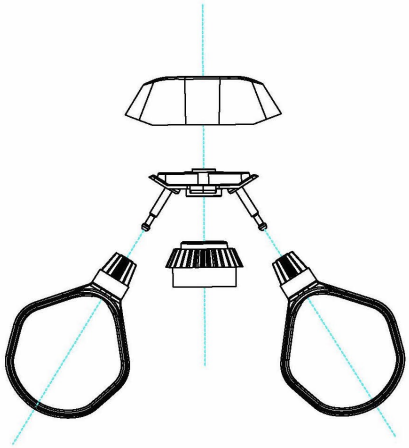

STORAGE

1. Unplug the cord from the wall outlet.
2. Make sure all parts are clean and dry

LIMITED ONE YEAR WARRANTY

This warranty covers all defects in workmanship or materials in the mechanical and electrical parts, arising under normal use and care in this product for a period of 12 months from the date of purchase provided you are able to present a valid proof-of-purchase. A valid proof-of-purchase is a receipt specifying item, date purchased, and cost of item. A gift receipt showing item and date of purchase is an acceptable proof-of-purchase. Product is intended for household use only. Any commercial use voids the warranty.

This warranty covers the original retail purchaser or gift recipient. During the applicable warranty period within normal household use, we will repair or replace, at our discretion, any mechanical or electrical part which proves defective, or replace unit with a comparable model. Shipping and handling costs are not included for warranty replacements and are the responsibility of the customer.

To obtain service under the terms of this warranty, call our customer care department at 312-526-3760 (Monday- Friday 10am-6pm CST), or send an email to customercare@alliedrich.net. Please provide the model number listed on the bottom of this page when contacting us.

THIS LIMITED WARRANTY COVERS UNITS PURCHASED AND USED WITHIN THE UNITED STATES AND DOES NOT COVER:

- **Damages from improper installation.**
- **Damages in transit.**
- **Defects other than manufacturing defects.**
- **Damages from misuse, abuse, accident, alteration, lack of proper care and maintenance, or incorrect current or voltage.**
- **Damage from service by other than authorized dealer or service center.**
- **Shipping and handling costs.**
- **This warranty gives you special legal rights and you may also have other rights to which you are entitled which may vary from state to state.**

Manufacturer does not assume responsibility for loss or damage for return shipment. We recommend that you keep your original packaging should you require repair service. Before returning product please contact our customer care department for return authorization. When returning product for repair please include your full name, return address, and daytime phone number. Also include a brief description of the problem you are experiencing and a copy of your sales receipt or other proof of purchase in order to validate warranty status.

MODEL CCDM2

COOK'S COMPANION